APPLICATION GUIDE

Skiving and Roller Burnishing

Manufacturing of Hydraulic Cylinders

Ordering information

Ordering information and other useful information can be found on the Sandvik Coromant website.
Visit our website for latest news!

www.sandvik.coromant.com

1 Introduction 2

Why skiving and roller burnishing? 3

What is skiving and roller burnishing? 4

Summary of performance 6

2 Applications 8

Types of workpieces 8

Workpiece preparation, fixturing by clamping and bushings 10

3 Machine set-up and requirements 15

Machine set-up 15

Coolant supply 17

4 Handling and setting 20

Setting of the skiving head 21

Changing skiving tool spare parts 21

Setting of the roller burnishing tool 22

Changing roller burnishing tool spare parts 23

5 Machining data 24

1. Introduction

Skiving and roller burnishing tools can be used in the production of high quality hydraulic cylinders with relative ease, but to gain perfect results there are a number of considerations to be made.

In this application guide, we show you how to operate the skiving roller burnishing tool from Sandvik Coromant. Our aim is to help you to produce consistent, high quality hydraulic cylinders with an excellent finish.

This guide also includes information on machine set-up and requirements, operation descriptions and a description of the different workpieces that can be used.

Why skiving and roller burnishing?

The skiving roller burnishing tool is a multifunctional tool used in the manufacturing of hydraulic cylinders and compared to honing the advantages are:

- 80-90% saving of machine time which reduces tool costs per meter of tube length.
- Produces super finish surface, with a bore tolerance of IT8, thereby reduces the sealing wear making it ideal for pistons.
- The tool can be optimized for both skiving and roller burnishing operations.

What is skiving and roller burnishing?

Description of the skiving operation:

Two thin chips are cut at a high feed rate (1-4 mm/rev) while the tool passes through the workpiece. This cutting operation determines the finished diameter and tolerance of the hydraulic tube. Surface finish R_a = 4-10 μm (skiving).

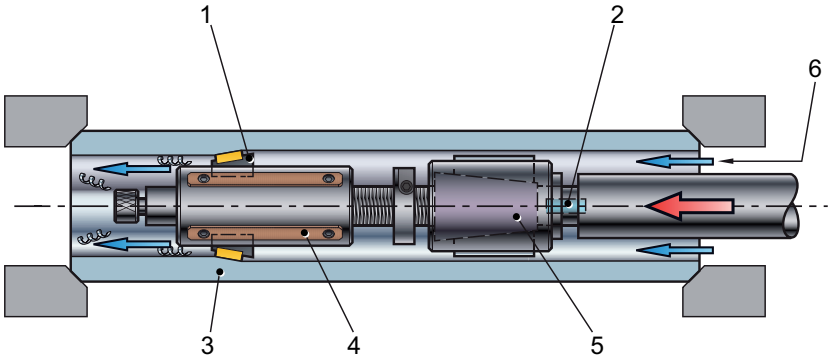

1. The two cartridges and the peg interact through spring tension. The complete unit (cartridges and peg) floats radially so that each insert takes exactly the same depth of cut.
2. Pneumatically operated piston for automatic insert retraction after finishing the skiving operation.
3. Radial cutting depth 0.3 mm, feed 2.5 mm/rev. (normal values).
4. Four support pads to keep the tool in position.
5. Inactive roller burnishing tool.
6. Coolant for chip evacuation.

Description of the roller burnishing operation:

Roller burnishing is performed on the return stroke. The plastic deformation taking place provides a surface finish of R_a = 0.05 - 0.20 µm - better than broaching, grinding or even honing. Surface hardness is increased by approximately 50% (steel).

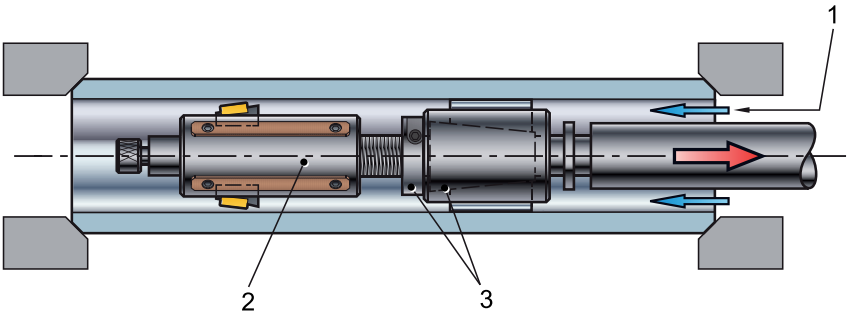

1. Coolant for lubrication
2. Inactive skiving head. The inserts are retracted and therefore prevent damage to the burnished surface.
3. The roller burnishing head moves backwards until it is located against the adjustment ring. The rolls are set to burnish the material of the workpiece bore and increase the diameter by approximately 0.04 mm.

Summary of performance

Skiving

- Surface finish R_a = 4-10 μm, R_t = 20-60 μm, at normal feeds (1-4 mm/rev) and a speed of v_c: 200 m/min.
- Lower feeds improves the surface finish.
- The skiving tool determines the finished diameter and produces a very accurate finish from entrance to exit. On thin-walled tubes, elastic deformation from clamping and machining will influence the finished diameter.
- The skiving tool follows the inner diameter (ID) of the component which secures the straightness.

Roller Burnishing

- Surface finish R_a = 0.05-0.20 μm.
- If the tube is very thin-walled, the burnishing will not be as effective as for normal tubes with t/ID = 0.1. Where t is wall thickness. See picture on next page.
- The tolerance grade is IT8 or better. Strong clamping, crossholes or irregular tube shape can deform the tube in different ways. Uneven wall thickness can cause ovality.
- The surface hardness can be typically increased by up to 50%.
- Finish can be better than grinding or honing (but lacks oil retention).

The design also includes the following benefits:

- Very strong type inserts to give you positive positioning.
- The tool skives on the forward stroke and burnishes on the reverse stroke.
- Pneumatically retracting inserts in the complete range of skiving tools. Prevents the burnished surface from any damage during the burnishing operation.
- As the skiving and burnishing operations are completed in separate operations power and feed force is kept to a minimum.
- For the same reason as above; optimizing of speed and feed can be made separately for skiving and roller burnishing.

2. Applications

Types of workpieces

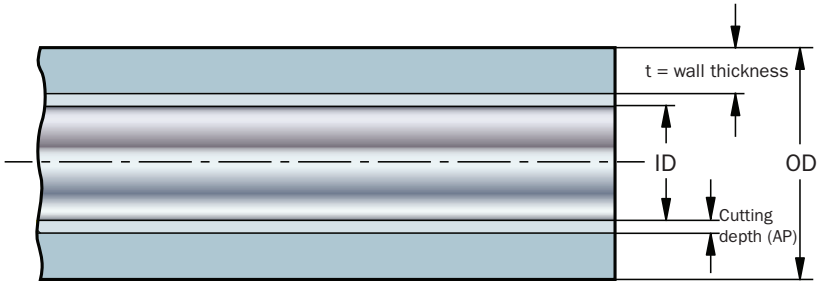

The tube is thin-walled if t/ID < 0.1

Tubes for hydraulic cylinders

DOM tubes (Drawn Over Mandrel)

Compared to CDS tubes, the DOM tubes have better concentricity and straightness.

Example:	ID	OD	AP	t	t/ID*
Welded from strips and cold-drawn. Eccentricity max 3%. Very even wall thickness.	50	60	0.2	5	0.1
	50	65	0.2	7.5	0.15
	100	110	0.2	5	0.05
	100	115	0.2	7.5	0.07
	100	120	0.2	10	0.10
	200	220	0.3	10	0.05
	200	225	0.3	12.5	0.06
	200	230	0.3	15	0.07

*The tube is thin-walled if t/ID < 0.1

CDS tubes (Cold Drawn Seamless)

Also called “Seamless”.
Compared to DOM tubes, the CDS tubes are available with greater wall thickness (t) and are used for sizes over 150 mm diameter.

- Stock removal AP, more than DOM.

Hot rolled tubes

Eccentricity and straightness are normally not good enough so a counterboring operation may have to be undertaken before the skiving and roller burnishing operation. Hot rolled tubes may be used as hydraulic tubing for diameters over 250 mm.

Normal material standards for all hydraulic tubes:

MC no.	Material Unalloyed steel
P1.1.Z.AN (01.1)	Non-hardened 0.10-0.25% C
P1.2.Z.AN (01.2)	Non-hardened 0.25-0.55% C
P1.3.Z.AN (01.3)	Non-hardened 0.55-0.80% C

Specifications	
C	0.2%
Si max	0.5
Mn	1.0-1.6
P max	0.05
S max	0.05
σ_S	440 N/mm^2
σ_B	490 N/mm^2
δ_b	20%

Shafts and special cylinders

Skiving separately or combined skiving and roller burnishing can of course be undertaken for applications other than hydraulic tubing.

The strong point is the very high feed rate and the accurate finished size with very small diameter difference from entry to exit, influenced only by workpiece elasticity and deformation. A limitation is the cutting depth; AP. Material with a hardness of up to about HRC 40 can be machined.

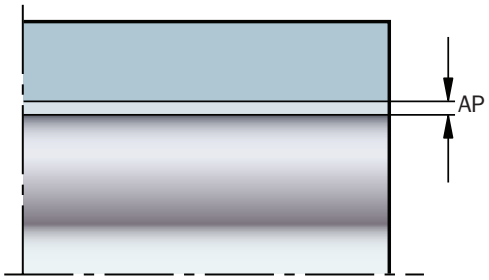

Max. rad. cutting depth; AP (mm)	Tool diameter
0.6/.024	38-56.9/1.496-2.240
1.0/.039	57-90.9/2.244-3.579
1.6/.063	91-306/3.583-12.047

Workpiece preparation, fixturing by clamping and bushings

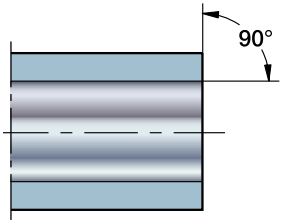

Before the operation can start, the workpiece ends must be well machined at 90 degrees as shown in the figure. The burnishing tool must pass through the end of the component prior to expanding and it will drop from center line if no support is provided. End caps can overcome this issue.

End Caps

The use of end caps on a component offers also greater sealing benefits and will enable support for the burnishing tool when passing out of the end of the component.

The sketch below illustrates a typical end cap that can be used for effectively sealing a component as well as providing support for the burnishing tool.

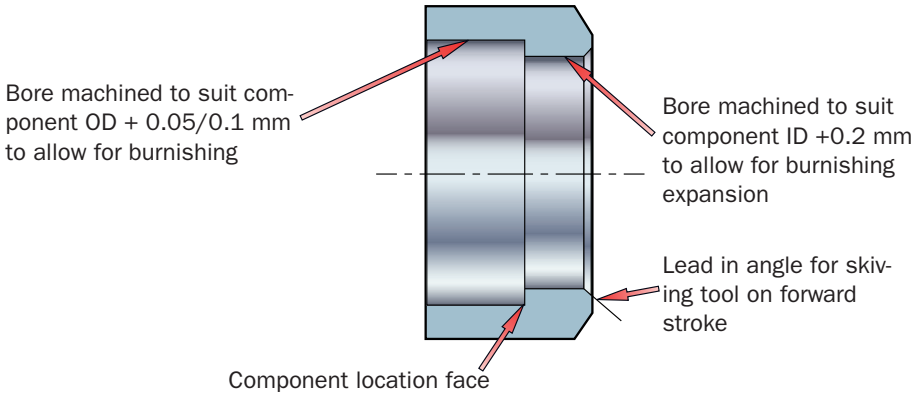

Clamping

It is very important that the center of workpiece ID and tool is aligned with each other.

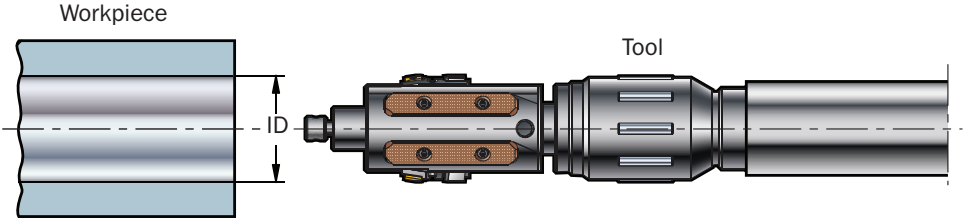

Example: Workpiece with even wall thickness (e.g. DOM tubes).

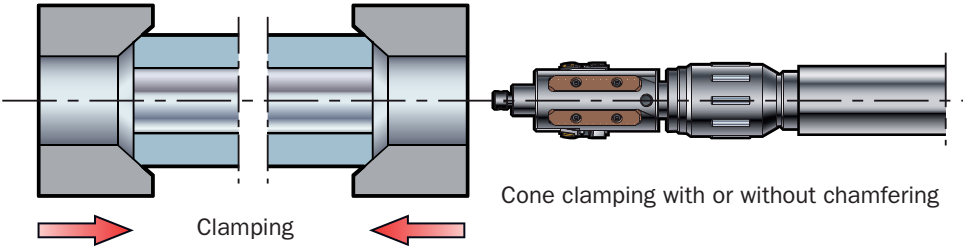

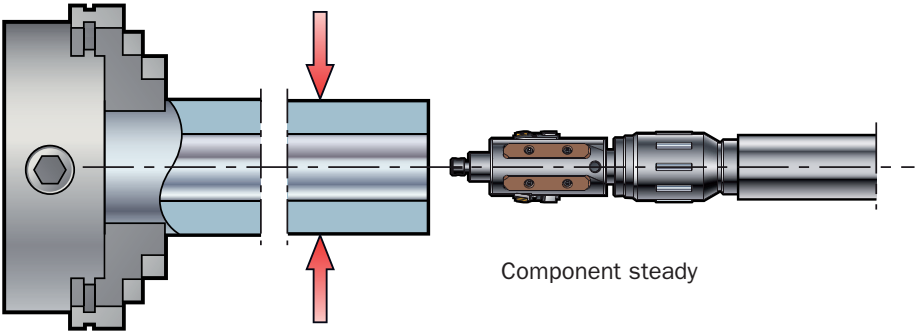

Example: Workpiece with uneven wall thickness.

Chamfering of workpiece, relative to ID must be made for good alignment when using cone clamping.

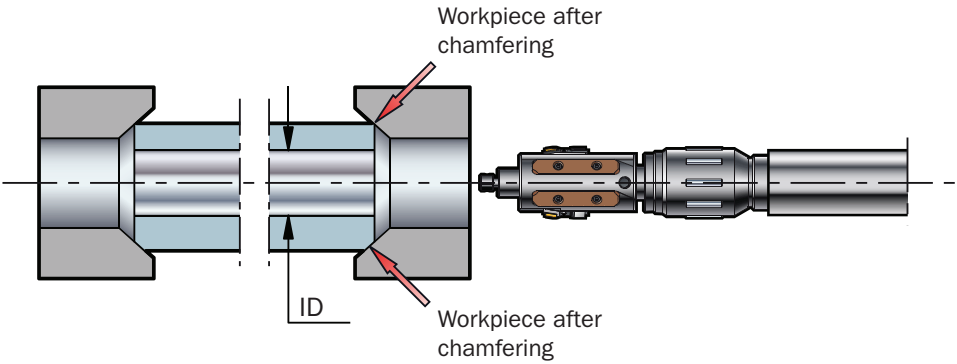

Bushing

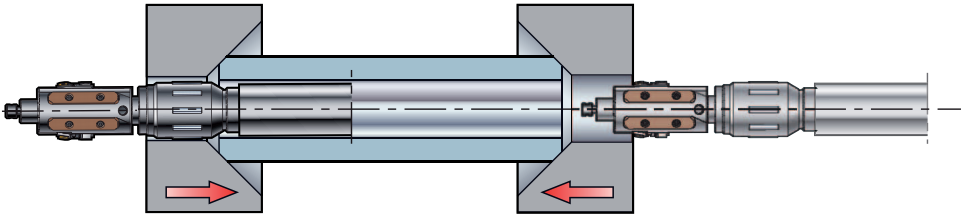

Entrance/support bushing is not normally needed as long as the drill tube is straight and well supported in the same center line (CL) as the workpiece ID.

Poor alignment will cause rapid wear of the guide pads.

An exit bushing is needed to prevent the tool from falling down after the skiving operation, avoiding it to hit the workpiece backface on the return/roller burnishing stroke.

If workpiece ID and bushing CL are very close the bushing can be chosen DC+0.5 mm (DC = skived diameter).

If CL of workpiece ID is varying very much the bushing must be made bigger than DC+0.5 mm. If not, the consequence will be that the tool will cut into the bushing thereby making the first part of the workpiece not burnished properly.

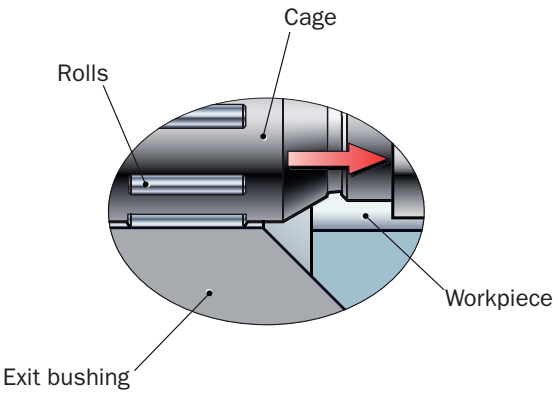

Standard rolls
Type 701

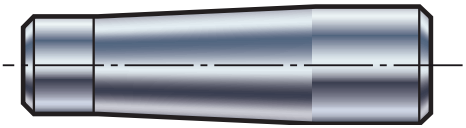

Alt. rolls for
smooth entering
Type 706

Another solution to prevent the tube and tool from falling down is to put pads on the drill tube.

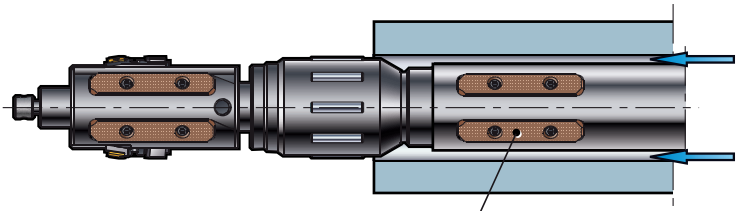

Tube support (support pads) with space in between for coolant supply

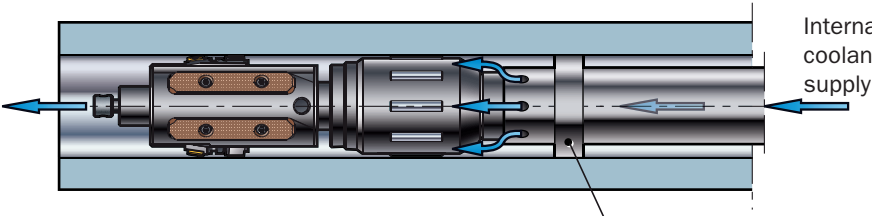

Tube support and coolant cover

3. Machine set-up and requirements

Machine set-up

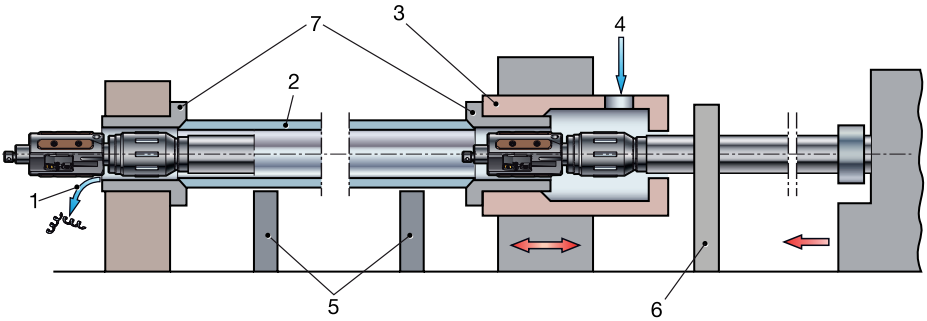

1. Coolant outlet
2. Workpiece
3. Oil pressure head (OPH)
4. Coolant inlet
5. Workpiece support
6. Vibration damper
7. Clamping cones

Rotating tool on a fixed workpiece is the simplest solution especially for long tube blanks. Since the bushing (clamping cones) are fixed the oil pressure head can be of a standard design.

Rotating workpiece on a fixed tool can be used with advantage for short tubes as long as they are balanced. Longer tubes need steady rests.

The skiving head should be positioned with inserts horizontally. The pad wear will be mainly on the bottom pads on which the tool rests.

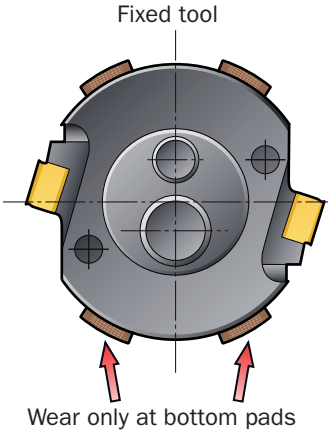

Machine tools

The most common machine tools are deep hole drilling machines for single tube system (STS) and Ejector drilling. Note that deep hole drilling machines for Ejector drilling must be equipped with OPH or with an extra adaptor for internal coolant supply plus a stuffing/sealing box (similar to OPH).

Honing machines can be adapted providing the feed rate can be kept constant and at sufficient speed. Likewise lathes can be used providing they are equipped for these operations with an OPH and a coolant system.

Air connection for insert retraction

A normal workshop air pressure supply of at least 5 bar (73 psi) is sufficient. It should be connected to the rear end of the tool normally through the machine spindle. Use a rotary connector if the tool is rotating.

Note!
When the air is “off”, ensure that the remaining air can be evacuated and does not stay trapped inside the air cylinder - the air piston must be free to spring back.

Coolant Supply

Normal supply

The easiest supply method is through an oil pressure head, OPH, so that the coolant passes over the tool and through the workpiece. The recommended coolant volume for safe chip evacuation out of the workpiece is 4 x DC (l/min) which normally gives very low coolant pressure.

Note: for tools with diameter 38-42 mm and with a drill tube of 36 mm in diameter, the limited space between the drill tube and the wall of the component will result in higher pressures which will rise relative to the length of the component. For low pressure pumps this will limit the length of the component which can be machined with this type of coolant supply.

For small diameter tools use drill tube diameter 22 mm and adapter up to 36 mm to reduce pressure.

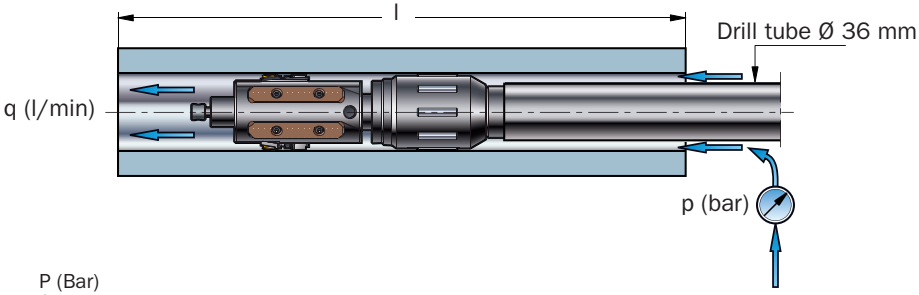

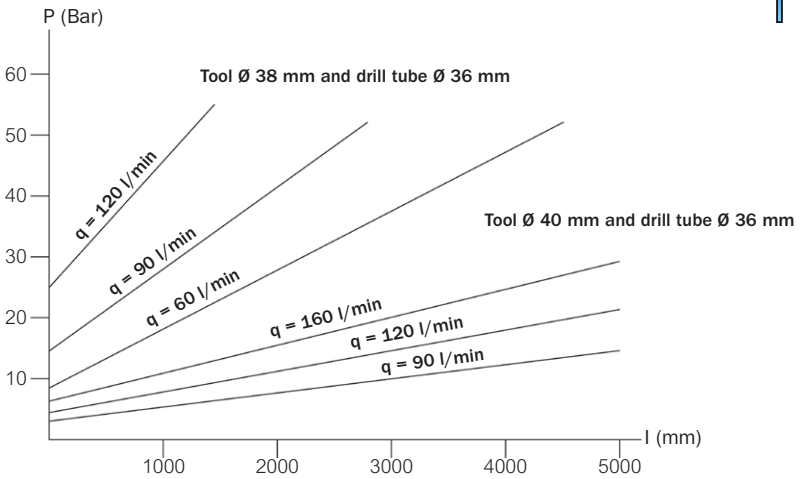

Alternative coolant supply

Coolant can alternatively be applied through the drill tube (rotating or fixed connector for respectively a rotating or fixed tool). An adaptor is required to direct the coolant forward over the tool. A cover is also needed behind the tool to prevent the coolant from leaking backwards.

Such a cover must be fitted inside the workpiece and thus support the drill tube when the tool protrudes after finishing the skiving operation.

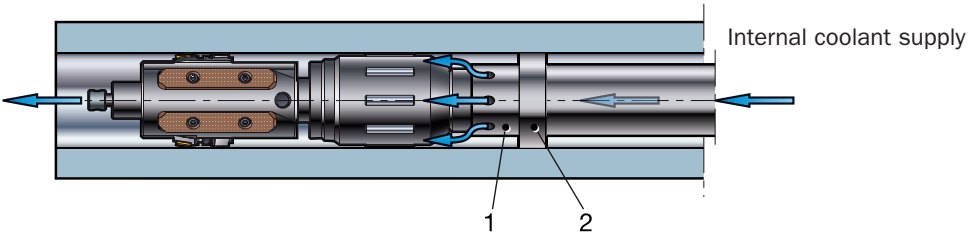

1. Adaptor, to let the coolant be directed forward over the tool.
2. Tube support and coolant cover.

Coolant volume and filtering

- Pump capacity should be a minimum of 4 x DC l/min.
- Tank size at least 10 x DC l/min.
- Coolant pressure 27 bar (392 psi) for 38 mm in diameter and 5 bar (73 psi) for diameter 305.9 mm is the pressure span.

Coolant pressure increases with groving workpiece length and when the space between workpiece and drill tube is small.

Neat oil or similar oil gives a much longer tool life to the roller burnishing tool than water based coolant. Filtering to at least 50 μm is required in all cases. A pressure filter for oil is necessary if the machine is used for honing to get the coolant through quickly enough.

4. Handling and setting

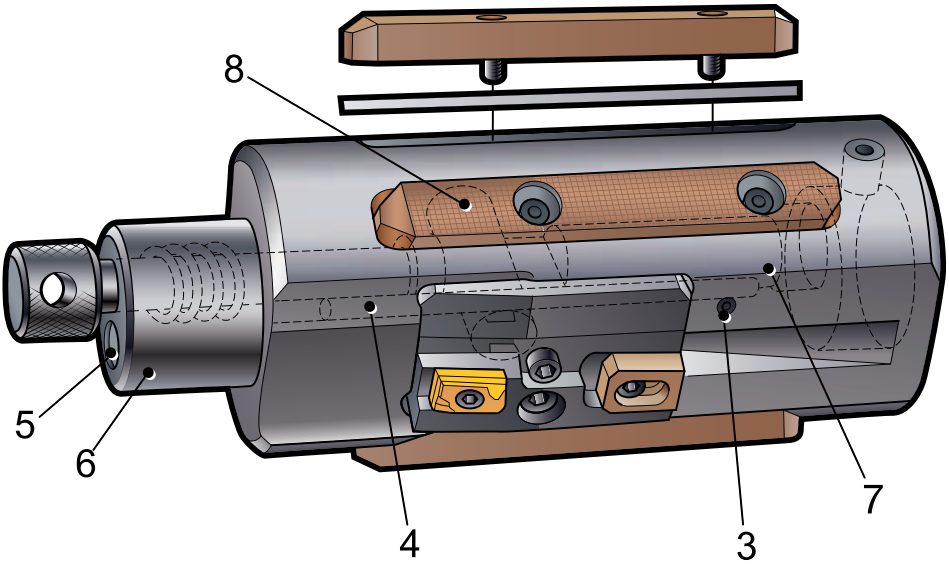

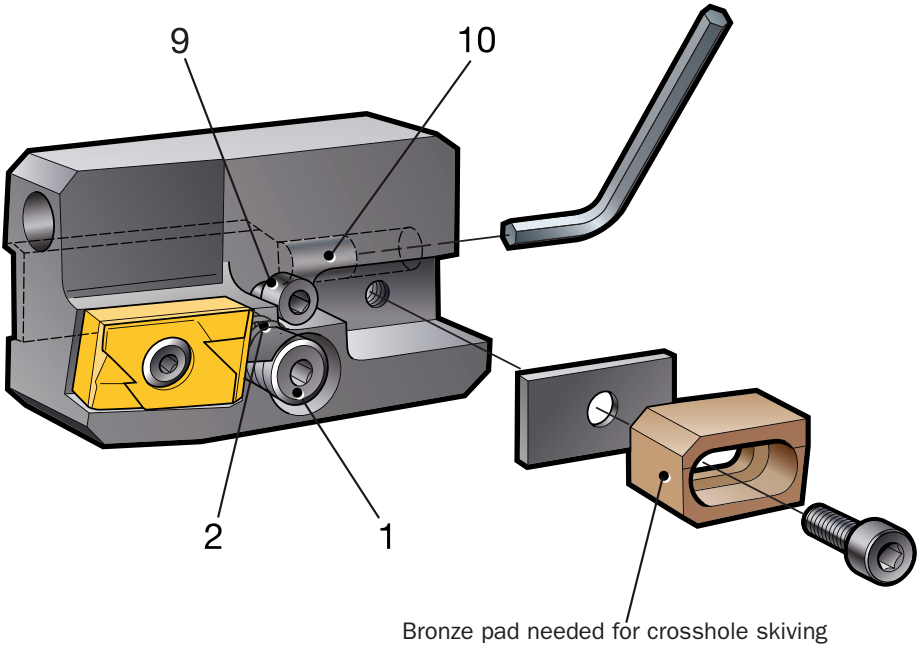

Setting of the skiving head

1. Turn the air supply off to the tool or disconnect it – this will set the skiving tool to the set cut diameter.
2. Ensure the wedges are set equally on both sides or set the tool to minimum diameter.
3. Check the diameter.
4. Undo the locking screw (item 9).
5. Turn the adjustment screw. One turn gives 0.2 mm radial movement (item 10).
6. Repeat adjustment equally for both sides.
7. It is essential that the inserts are the same radius +/- 0.1 mm. Remember one turn gives 0.2 mm radial movement.
8. Tighten the locking screw (item 9).
9. Check the diameter again. Repeat the adjusting procedure if necessary. Remember to keep the wedges adjusted equally.
10. Check final diameter with both locking screws tight.
11. Remember that the skiving tool should be set 0.076 – 0.127 mm below the roller burnishing tool diameter.

Changing skiving tool spare parts

1. Unscrew the screw and spring (items 1 and 2).
2. Loosen the screw (item 3).
3. Remove the two parallel pins and cartridges (item 4).
4. Loosen the screw (item 5) and remove the cap (item 6). Consider the spring tension.
5. Pull the push rod to extract the control gear (item 7) while pushing the peg (item 8).

Setting of the roller burnishing tool

Method 1

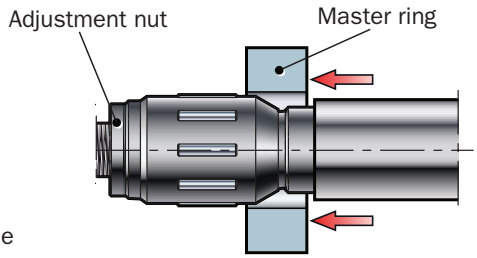

Size is set by the adjustment nut. When the master ring can just about be pulled over the rolls, the tool is at the master ring size (eg. 80.005 mm).

From this master ring size we can set the tool to any size by using the scale graduation on the adjustment nut - e.g. to 80.18 mm as in the example below.

Method 2

1. Loosen adjustment nut.
2. With master ring on the rolls draw ring and cage up close to the mandrel tip, turn the ring part of a revolution clockwise until tip, rolls and ring are in close contact.
3. Screw adjustment nut until it is in contact with the cage.

With this method the tool is already at “0” set a little bit bigger size than with method 1.

Setting example

1. Set skiving head diameter to 80.05 mm (depends on wall thickness).
2. Hole after skiving 80.02 mm.
3. Set roller burnishing head to 80.18 mm.
4. Hole diameter after burnishing will be 80.06 mm

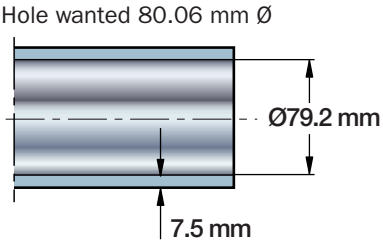

Rule of thumb: Skiving tool diameter will be approximately the finished diameter after roller burnishing.

Changing roller burnishing tool spare parts

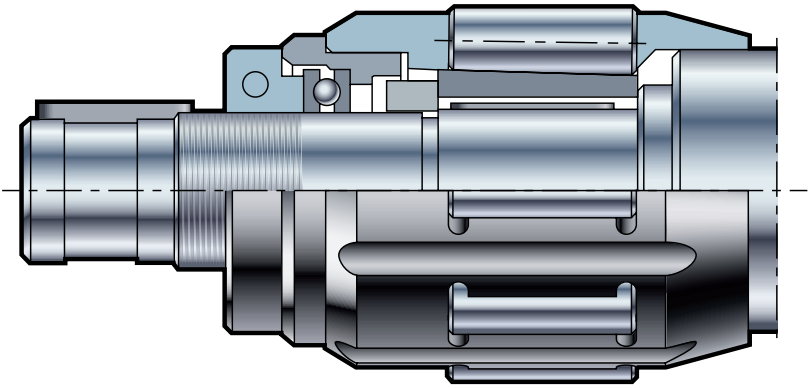

Assembly

1. Insert the new rolls and mandrel tip in the cage (with the aid of grease).
2. Insert the assembly gently onto the cone.
3. Tighten the lock nut until it reaches the stop position.
4. Set the roller burnishing tool to the desired diameter.

Disassembly

1. Loosen the adjustment nut by the hexagon key.
2. Remove the cage adapter.
3. Remove the lock nut.
4. Remove the cage, the rolls and the cone as one single unit.

5. Machining data

Speeds and feeds (AP = 0.3 mm)

Skiving			Tool diameter	Roller burnishing		
Speed (v) m/min	Feed (s) mm/rev	Oil l/min	Ø mm	Speed	Machine feed (s) mm/rev	Self-feed (SF*) mm/rev
80 - 300	1-4	160	38 - 43.9	max 200	1.2	0.9 - 1.0
		180	44 - 51.9		1.3	1.0 - 1.1
		220	52 - 56.9	max 250	1.3 1.8	1.1 - 1.5
	1-4	250	57 - 67.9			
		320	68 - 90.9		1.8 - 2.1	1.5 - 1.9
	1-5	400	91 - 110.9	max 300	2.2 - 2.6	1.9 - 2.4
		500	111 - 148.9		2.7 - 3.8	2.4 - 3.4
		650	149 - 185.9		3.7 - 4.8	3.4 - 4.4
		800	186 - 221.9		4.7 - 5.6	4.4 - 5.2
		1000	222 - 257.9		5.5 - 6.3	5.2 - 5.9
		1200	258 - 305.9		6.2 - 7.1	5.9 - 6.7

* If machine feed is used, it must exceed the tool self-feed (SF) by 10%.

Cutting depth

Normal cutting depth for DOM-tubes is 0.3 mm. Reduce feed for greater depths.

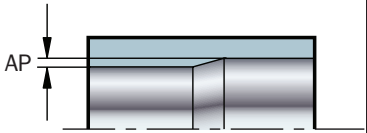

Range (mm)	Theor. max. AP (mm)	Insert
3 = 38 - 56.9	0.61	R 420.37-060200-01 GC1025
4 = 57 - 90.9	1.0	R 420.37-070800-01 GC1025
5 = 91 - 305.6	1.6	R 420.37-111200-01 GC1025

Power requirements

Skiving net power (kW)	Diameter (mm)	AP (mm)	Feeds (mm)	Speed (m/min)
6	40	0.4	2	200
14	100	0.8	2.5	200
30	200	1.0	3.0	200

In proportion to cutting depth. Normal cutting depth and power required is less. Idling power must be added.

Feed force

Roller burnishing max 4 000 - 15 000 N depending on:

- Tool size.
- Difference in tool diameter setting between roller burnishing head and skiving head.
- Override of self-feed.

A normal value for tools 80 mm is feed force about 6 000 N.

Chipbreaking

The length of chip is related to the feed rate. Normally chips are short but sometimes long spiral chips are produced. Long chips will not cause any damage if the exit from workpiece to chipbox is straight or clear but they do take up more space in the chipbox.

Anticipated tool life

At a speed of 200 m/min:

- Skiving insert - minimum 50m/edge
- Roller burnishing head
    - rolls > 200 m
    - mandrel > 400 m
    - cage > 4000 m

Small diameter - short life. Emulsion gives a shorter tool life than oil. Feeds much over self-feed decreases tool life. Heavier rolling pressures will reduce tool, mandrel tip and cage life.

Head office:
AB Sandvik Coromant
SE-811 81 Sandviken, Sweden
www.sandvik.coromant.com
E-mail: info.coromant@sandvik.com

C-2920:36 ENG/01 Printed on recycleable paper.
Printed in Sweden, AB Sandvikens Tryckeri. © AB Sandvik Coromant 2012.08

Your success in focus